CAMLogic®	**Istruzione montaggio** *Assembly instruction* Technical department	**Data** *Date*	02/08/2024
		Nr	0605_0002_00

Famiglia prodotto *Product family*	PFG05		
Tipo prodotto *Product type*	Rotary level indicator for solids		
Versione (i) *Version (s)*	STANDARD		
Oggetto *Object*	Assembly instruction for protected extension		
Distribuzione *Distribution*	Sales department	☒	
	Quality department	☒	
	Production department	☒	
	Customers / Suppliers	☒	
	Marketing / Web site	☒	

SUMMARY

1 DESCRIPTION 1
2 LIST OF OPERATIONS 1
3 REVISION 4

1 DESCRIPTION

EXTENSION ASSEMBLY

In the following, we are going to reproduce what is the assembly of an extension cable with protection on a standard PFG05 sensor that does not have one (e.g. extension cable is delivered separately).

DISASSEMBLING THE EXTENSION

To uninstall the extension simply repeat the steps in reverse.

2 LIST OF OPERATIONS

Observe the drawings that follow and the comments placed under each drawing.

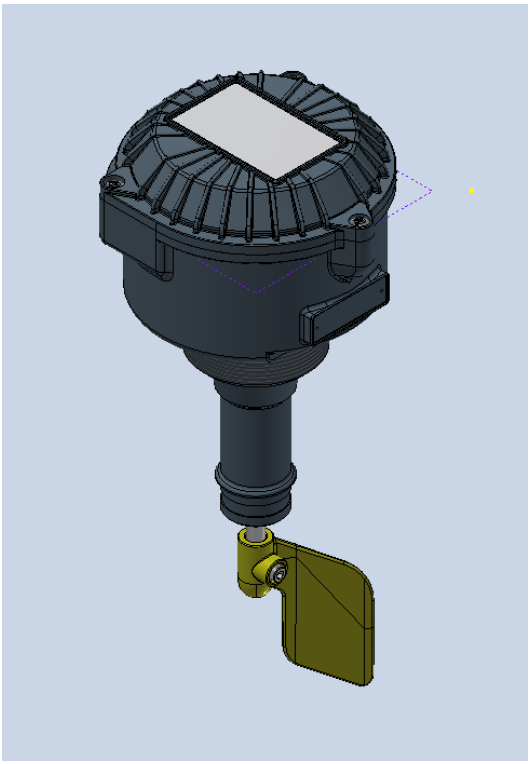	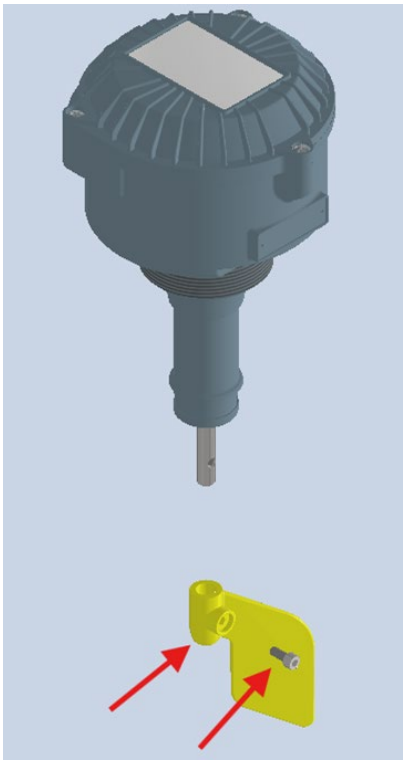
Assembled sensor.	Remove fastening screw and then pull out the paddle.
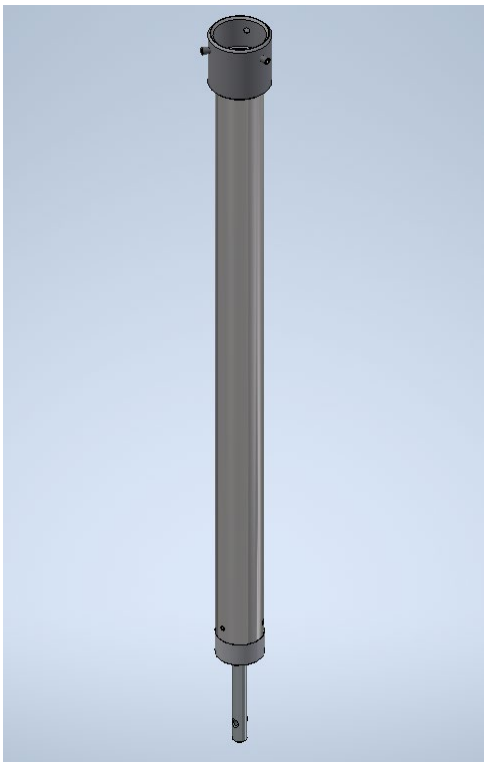	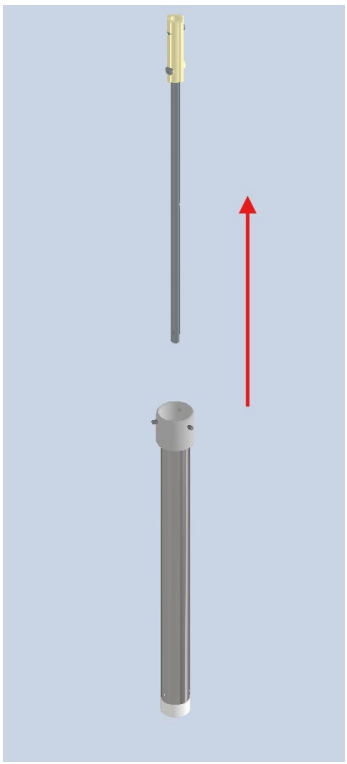
Take extension with protection.	Pull the extension shaft upwards.

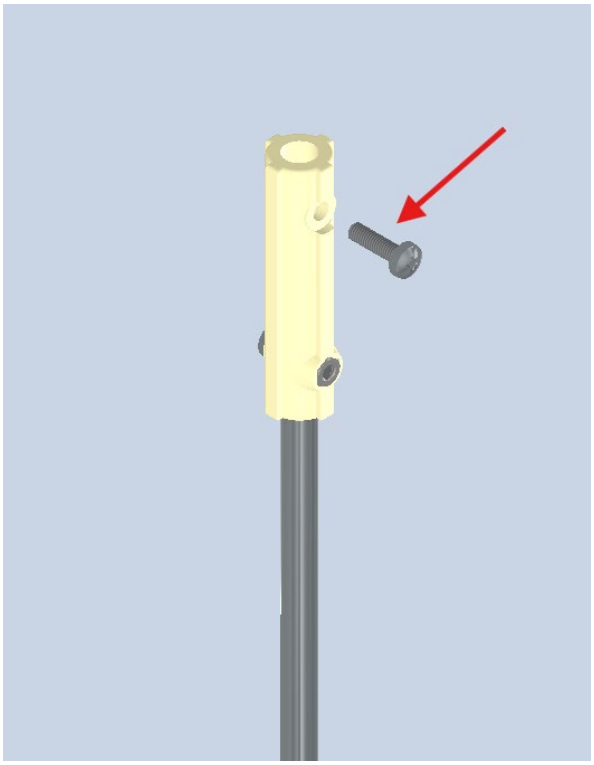

Unscrew the upper screw of the coupling.

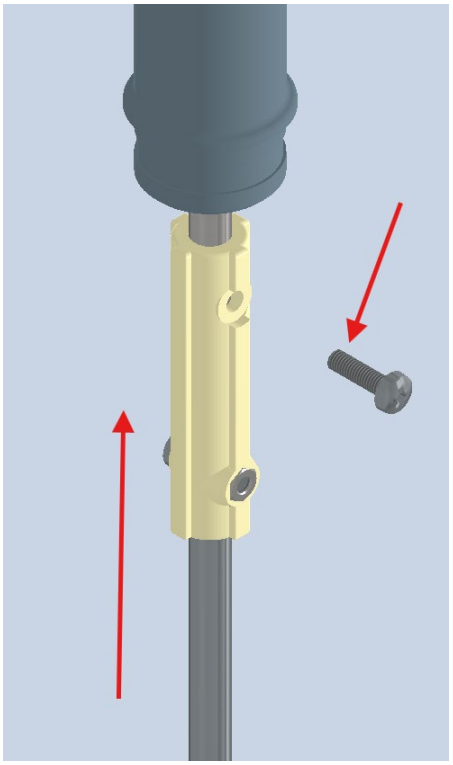

Insert the extension with the joint and tighten the screw removed earlier.

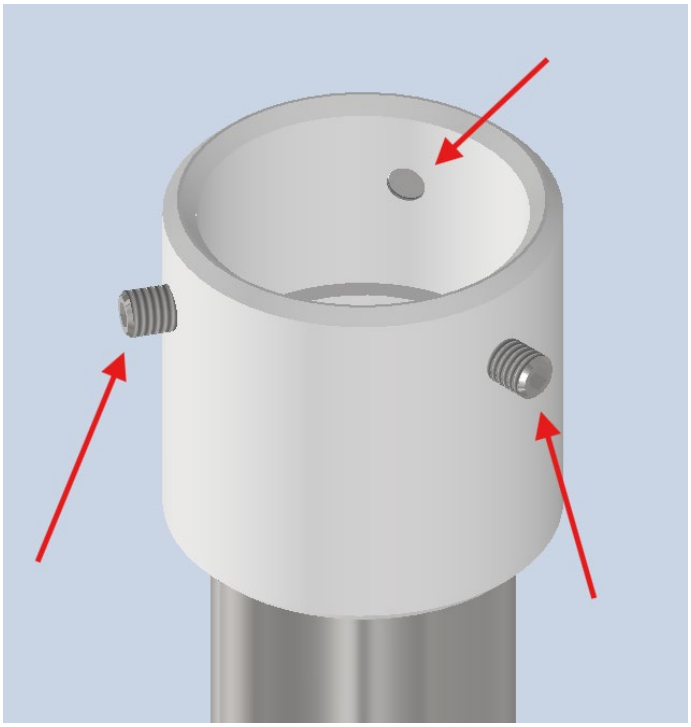

Unscrew the 3 grub screws on the neck of the guard so that it can fit onto the indicator head.

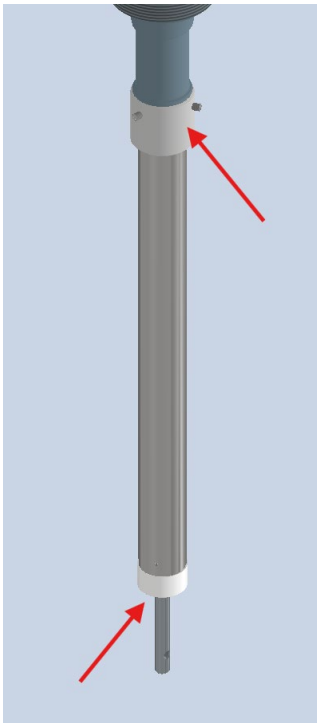

Thread the protector into the neck of the indicator, taking care when passing the extension into the sealing ring.

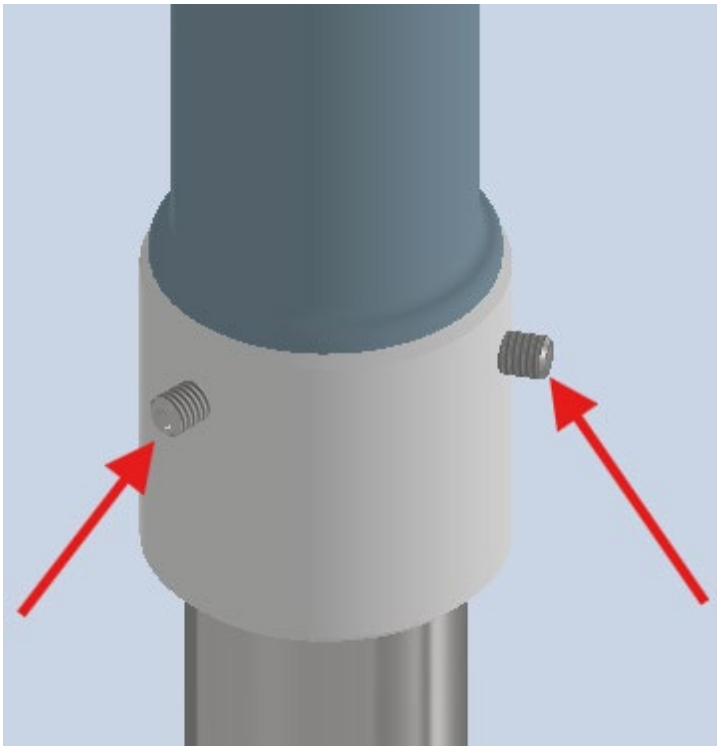	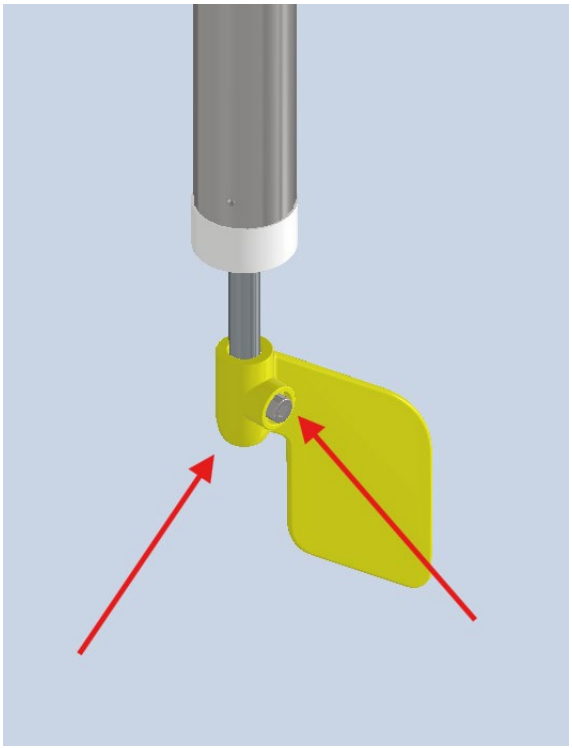
Screw in the 3 beads one at a time and evenly.	Reposition the propeller on the extension and tighten the fastening screw.

IMPORTANT: Before connecting the indicator to the process check that it works properly!

3 REVISION

Revisione N. *Revision N.*	**Data** *Date*	**Descrizione dei cambiamenti** *Description of the changes*
0	02/08/2024	First issue